FAIRFILD

POWER RESISTOR

Since 1977

DATABOOK

File N° E228809

PRODUCT	PHOTO	DESCRIPTION	PAG.
RFK		The RFK is a wire resistance wound on a mica cement coated plate, immersed in quartzite sand and placed in an anodized aluminium casing. Sealing is carried out using silicone elastomer and aluminium cap.	6
RFD *Thermal switch upon request*		The RFD is a wire resistance wound on a mica cement coated plate, immersed in quartzite sand and placed in an anodized aluminium casing. The sealing is done by silicone elastomer. Version with thermal pad called the RFDT can be purchased also.	6
RFX	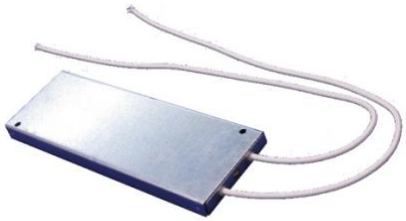	The RFX is a wire resistance wound on a mica coated cement plate enclosed in a galvanised sheet case that is not sealed. Versions are available with built-in winding. Version with clixon called the RFXT is also available.	7
RFZ/C		The RFZ/C is a resistance made of an aluminium heat-sink with coiled wire inserted in perforated ceramic and filled with quartzite sand. The metal case is sealed with silicone elastomer.	7

RFZT/C *With Thermal switch*		Model RFZT/C is identical to model RFZ/C with the addition of the clixon.	7
RFP *Thermal switch upon request*	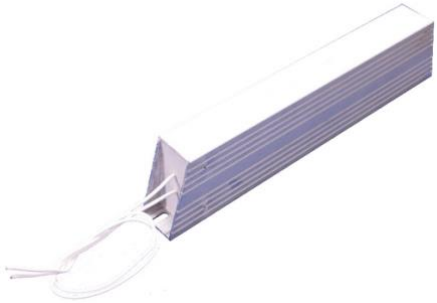	The RFP is a wire resistance wound on a mica plate, immersed in quartzite sand and placed in an anodized aluminium casing. Sealing is done through dielectric cement. The cables are made of PTFE. The RFP resistance exists in the Vertical version (RFP/V) and the horizontal version (RFP/H). Only the version marked UL can be purchased. Other versions available are those with thermal switch, (RFP T) those with built-in fuse (RFP F) and the version with thermostat and fuse (RFP FT).	8
RMS		Stainless steel terminals for screws M6, very robust design for high energy pulses and heavy overload. The RMS is a wire resistance wound on ceramic mounted on a metal support. Thanks to this construction the thermal resistance is very low: the wire is free to exchange heat with the surrounding air very efficiently. Even in terms of the heat capacity the RMS ensures very high performances. The version with mica bar ensures insulation values higher beyond a lower weight.	8
RMSN *Not inductive*		Stainless steel terminals for screws M6, very robust design for high energy pulses and heavy overload. The RMSN is identical to RMS, but it is built with not-inductive winding.	8

RME ed B. *Thermal switch upon request*	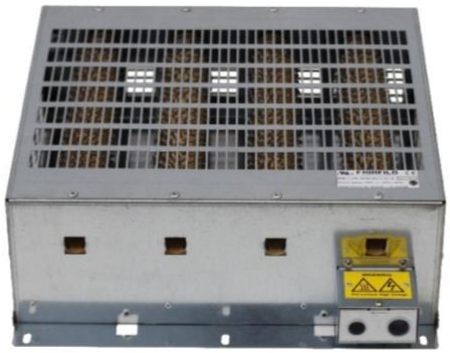	RME series contains coiled coil resistors. The frame of the enclosure is made of galvanized steel and has an IP20 degree of protection. The power terminals are available on a clamp and are located within the terminal box, which can be opened. The box is equipped with thermal switch with proper terminal in the terminal box.	9
RX *Thermal switch upon request*	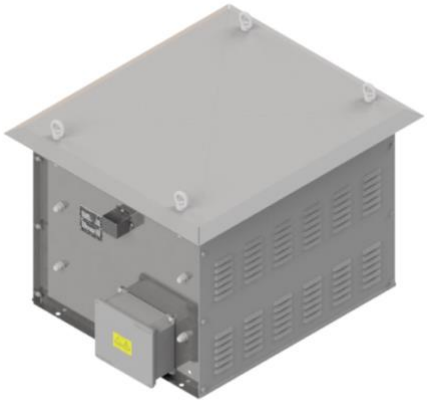	RX series uses RMS nude wire-wound elements. The frame of the enclosure is made of galvanized steel and has an IP23 degree of protection. The power terminals are nickel plated brass screw terminals and are found inside a terminal box. The box is equipped with thermal switch with proper terminal on the external side of the framework.	12
RNP		The RNP is a resistance with strip wrapped edgeways on ceramic U-bolts mounted on a metal rod. Thanks to this construction the thermal resistance is very low: the strip is in fact free to exchange heat with the surrounding air very effectively. Even in terms of the heat capacity the RNP ensures very high performances. The RNP series does not provide default ohmic values or predetermined resistive alloys. Only the length of the bar is fixed.	16
RNT		The RNT is a resistance with strip wrapped edgeways on ceramic brackets mounted on a metal tie rod or threated ceramic tube. Thanks to this construction the thermal resistance is very low: the strip is in fact free to exchange heat with the surrounding air very effectively. Even in terms of the heat capacity the RNT ensures very high performances. The RNT series does not provide default ohmic values or predetermined resistive alloys	17

PRODUCT	MODEL	RATED POWER	OPERATING VOLTAGE	IP	RESISTANCE VALUE (min-max)	POWER TERMINALS	DRAWING N°
RFK	RFK 250	75	600	IP65	1.5 ÷ 3600	Flexible Wiring Leads AWG14	1
	RFK 350	100			4 ÷ 2400		
	RFK 500	150			3 ÷ 1800		
RFD *Thermal switch upon request*	RFD 50	25	600	IP55	2 ÷ 6000	Flexible Wiring Leads AWG14	2
	RFD 100	45			2 ÷ 4500		
	RFD 150	75			1.5 ÷ 3600		
	RFD 200	100			4 ÷ 2400		
	RFD 300	150			3 ÷ 1800		
	RFD 550	200			2.5 ÷ 1500		
RFX	RFX 600	75	600	IP20	1.5 ÷ 3600	Flexible Wiring Leads AWG14	3
	RFX 1300	150			3 ÷ 1800		
RFZ/C	RFZ/C 100	70	600	IP55	1.1 ÷ 39	Flexible Wiring Leads AWG14	4
	RFZ/C 160	100			3.0 ÷ 100		
	RFZ/C 200	125			3.9 ÷ 120		
	RFZ/C 260	160			5.6 ÷ 150		
	RFZ/C 300	185			6.2 ÷ 200		
	RFZ/C 320	200			6.8 ÷ 220		
RFZT/C *With Thermal switch*	RFZT/C 100	50	600	IP55	1.1 ÷ 39	Flexible Wiring Leads AWG14	4
	RFZT/C 160	70			3.0 ÷ 100		
	RFZT/C 200	90			3.9 ÷ 120		
	RFZT/C 260	115			5.6 ÷ 150		
	RFZT/C 300	130			6.2 ÷ 200		
	RFZT/C 320	140			6.8 ÷ 220		
RFP *Thermal switch upon request*	RFP 200-V	200	1000	IP64	1 ÷ 220	Flexible Wiring Leads AWG14	5
	RFP 200-H	200					
	RFP 300 V	300			1.8 ÷ 390		
	RFP 300-H	250					
	RFP 400-V	370			2.7 ÷ 560		
	RFP 400-H	300					
	RFP 500-V	500			3.3 ÷ 820		
	RFP 500-H	400					

PRODUCT	MODEL	RATED POWER	OPERATING VOLTAGE	IP	RESISTANCE VALUE (min-max)	POWER TERMINALS	DRAWING N°
RMS	RMS5	500÷700	1000*	IP00	1.0 ÷ 51	Connection bar screw Metric M6	6
	RMS6	840÷1200			1.2 ÷ 63		
	RMS7	945÷1350			1.5 ÷ 74		
	RMS8	1050÷1500			1.8 ÷ 86		
	RMS9	1225÷1750			2.0 ÷ 100		
	RMS10	1400÷2000			2.3 ÷ 110		
RMSN *Not Inductive*	RMSN5	500÷600	1000*	IP00	1.0 ÷ 13	Connection bar screw Metric M6	6
	RMSN6	840÷1100			1.2 ÷ 16		
	RMSN7	945÷1200			1.5 ÷ 19		
	RMSN8	1050÷1400			1.8 ÷ 22		
	RMSN9	1225÷1600			2.0 ÷ 25		
	RMSN10	1400÷1800			2.3 ÷ 28		
RME ed. B *Thermal switch upon request*	RME 01S	600	800	IP20	2.2 ÷ 100	Clamp max cable section 6 mm^2	7
	RME 01M	900			4.7 ÷ 180		8
	RME 02M	1700			2.2 ÷ 220		9
	RME 01L	1275			6.3 ÷ 270		10
	RME 02L	1900			3.3 ÷ 220		11
	RME 03L	3300			2.2 ÷ 180		12
	RME 04L	4500			1.5 ÷ 180		13
RX *Thermal switch upon request*	RX 21S	4500	1000	IP23	0.33 ÷ 220	Bolt metric M10	14
	RX 35S	8500			0.27 ÷ 110		15
	RX 50S	15000			0.39 ÷ 62		16
	RX 65S	20000			0.51 ÷ 47		17
RNP	800	495 ÷ 890	600	IP00	0.1 ÷ 2.7	Connection bar screw metric M8	18
	1000	619 ÷ 1105			0.12 ÷ 3.6		
	1200	742 ÷ 1350			0.15 ÷ 4.3		
RNT	2	275 ÷ 477			0.051 ÷ 1.21		19
	3	447 ÷ 778			0.083 ÷ 1.97		
	4	621 ÷ 1080			0.115 ÷ 2.74		
	5	795 ÷ 1381			0.147 ÷ 3.5		
	6	966 ÷ 1550			0.18 ÷ 4.27		
	700	487 ÷ 794	1000		0.11 ÷ 0.81		20
	900	581 ÷ 922			0.14 ÷ 0.75		21
	1000	797 ÷ 1000			0.12 ÷ 0.71		22
	1100	766 ÷ 1250			0.08 ÷ 0.44		23

1 - RFK

DIMENSION	l mm[inch]	L mm[inch]	Weight kg[lb]
RFK 250	98[3.86]	113[4.45]	0.32[0.70]
RFK 350	148[5.83]	163[6.42]	0.5[1.1]
RFK 500	204[8.03]	219[8.62]	0.63[1.39]

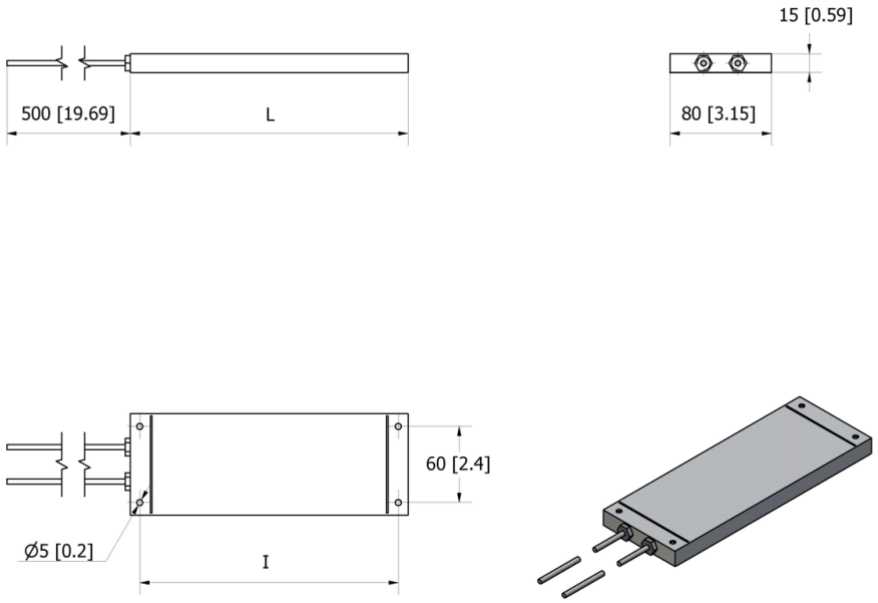

2 - RFD

DIMENSION	L mm[inch]	L1 mm[inch]	l mm[inch]	l1 mm[inch]	H mm[inch]	d mm[inch]	Weight kg[lb]
RFD 50	100[3.94]	40[1.57]	No holes	No holes	15[0.59]	No holes	0.16[0.35]
RFD 100	100[3.94]	60[2.36]	88[3.46]	40[1.57]	15[0.59]	5[0.2]	0.22[0.48]
RFD 150	110[4.33]	80[3.15]	98[3.86]	60[2.36]	15[0.59]	5[0.2]	0.32[0.7]
RFD 200	160[6.3]	80[3.15]	148[5.83]	60[2.36]	15[0.59]	5[0.2]	0.5[1.1]
RFD 300	216[8.5]	80[3.15]	204[8.03]	60[2.36]	15[0.59]	5[0.2]	0.63[1.39]
RFD 550	220[8.66]	100[3.94]	180[7.09]	83.5[3.29]	20[0.79]	6.3[0.25]	0.98[2.16]

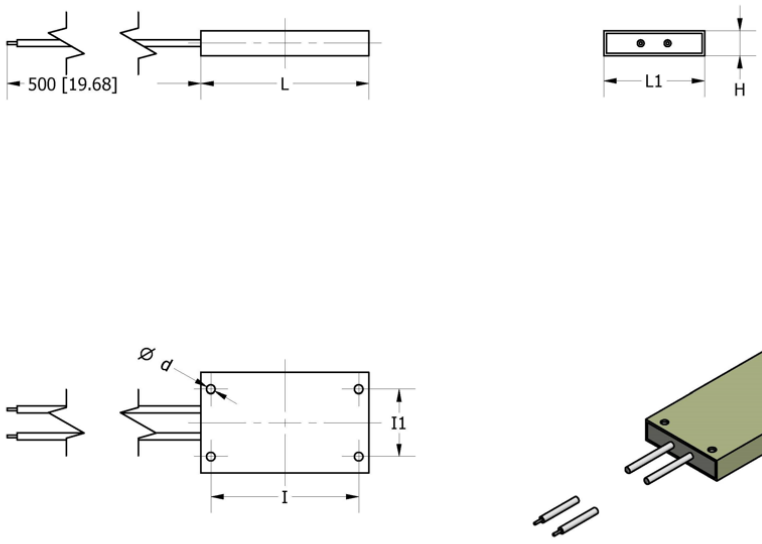

3 – RFX

DIMENSION	L mm[inch]	I mm[inch]	Weight kg[lb]
RFX 600	105[4.13]	81[3.19]	0.26[0.57]
RFX 1300	198[7.79]	174[6.85]	0.46[1.01]

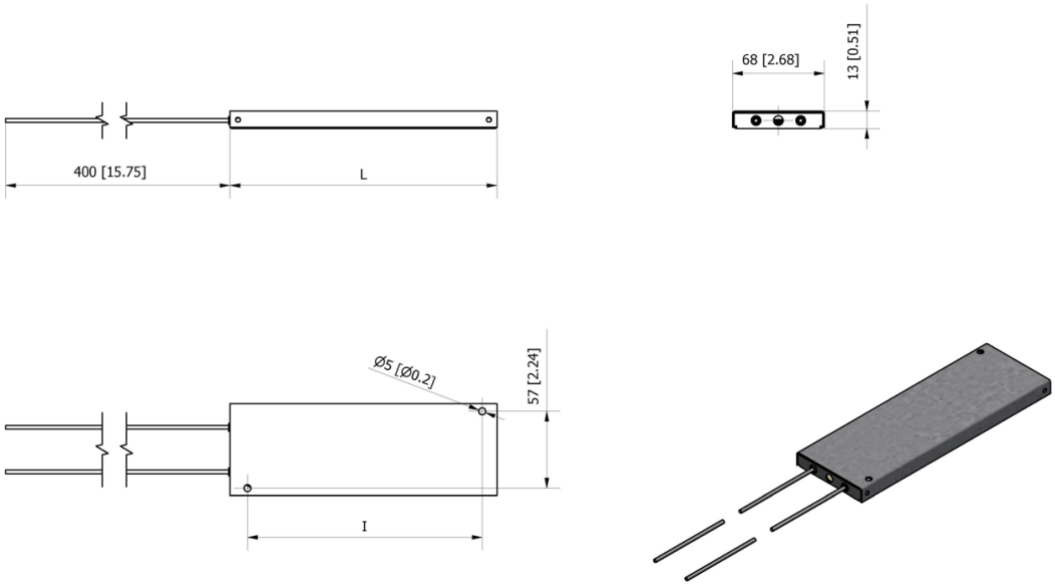

4 – RFZ/C – RFZT/C

DIMENSION	I mm[inch]	L mm[inch]	Weight kg[lb]
RFZ/C 100	85[3.35]	100[3.94]	0.18[0.4]
RFZ/C 160	145[5.71]	160[6.3]	0.3[0.66]
RFZ/C 200	185[7.28]	200[7.87]	0.38[0.84]
RFZ/C 260	245[9.64]	260[10.24]	0.5[1.1]
RFZ/C 300	285[11.22]	300[11.81]	0.57[1.26]
RFZ/C 320	305[12.01]	320[12.6]	0.6[1.32]

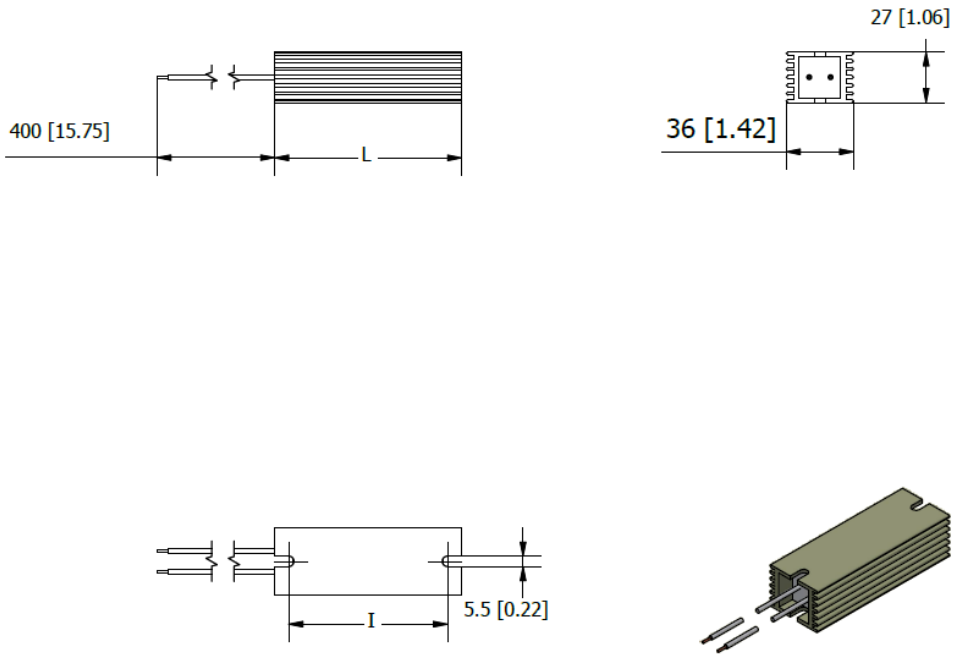

5 – RFP

DIMENSION	I mm[inch]	L mm[inch]	Weight kg[lb]
RFP 200	147[5.79]	167[6.57]	0.52[1.15]
RFP 300	197[7.75]	217[8.54]	0.7[1.54]
RFP 400	247[9.72]	267[10.51]	0.9[1.98]
RFP 500	317[12.48]	337[13.27]	1.15[2.53]

Vertical V (V)

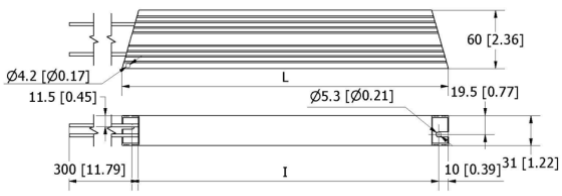

Horizontal Version (H)

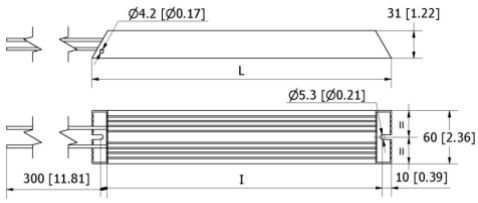

6 – RMS – RMSN

DIMENSION	I mm[inch]	L mm[inch]	ø A mm[inch]	Weight kg[lb]
RMS 5	340[13.38]	380[14.96]	20[0.79]	1.05[2.31]
RMS 6	400[15.75]	440[17.32]	20[0.79]	1.2[2.64]
RMS 7	460[18.11]	500[19.68]	20[0.79]	1.35[2.98]
RMS 8	520[20.47]	560[22.05]	20[0.79]	1.5[3.31]
RMS 9	580[22.83]	620[24.41]	20[0.79]	1.6[3.53]
RMS 10	650[25.59]	700[27.56]	27[1.06]	1.7[3.75]

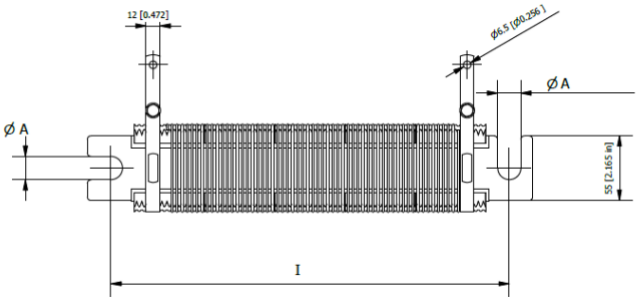

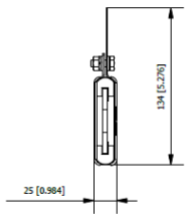

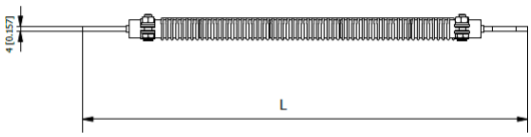

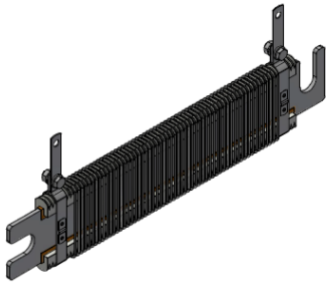

7 – RME 01S

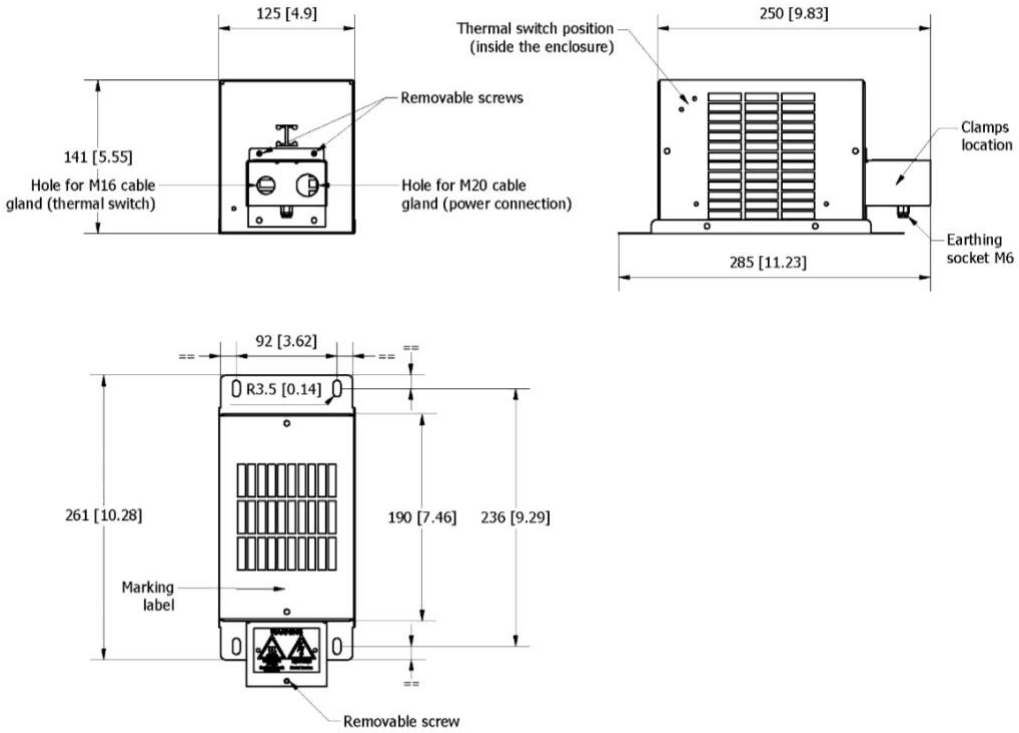

8 – RME 01M

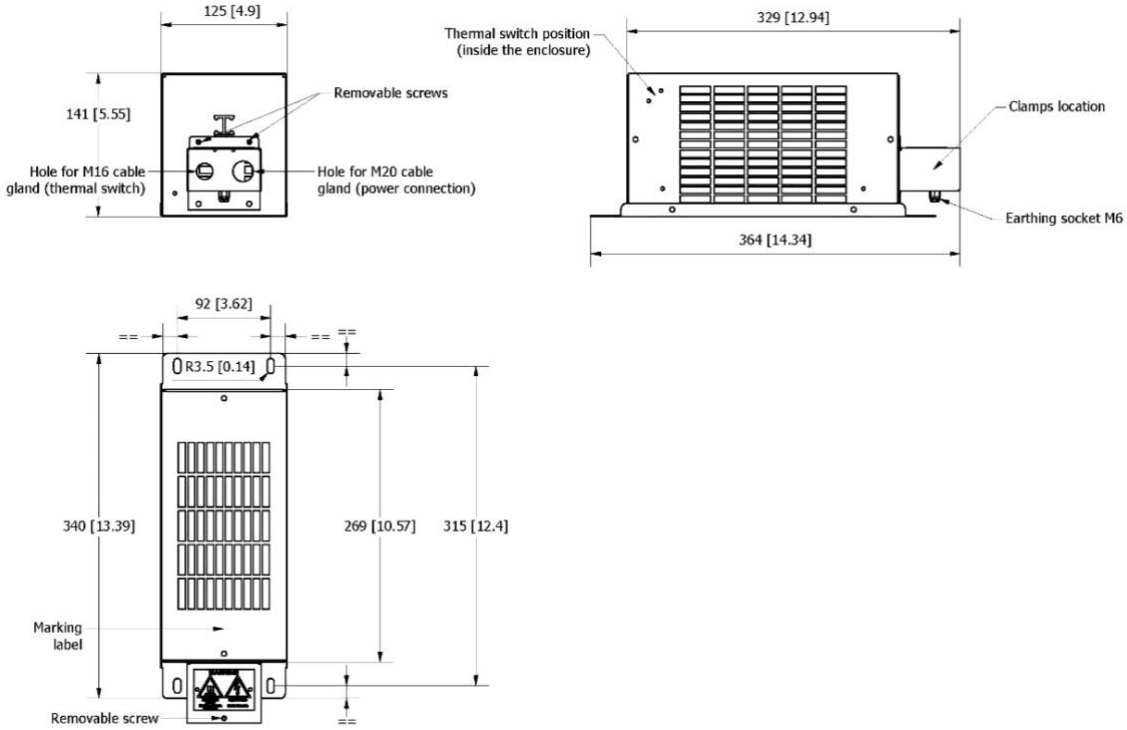

9 – RME 02M

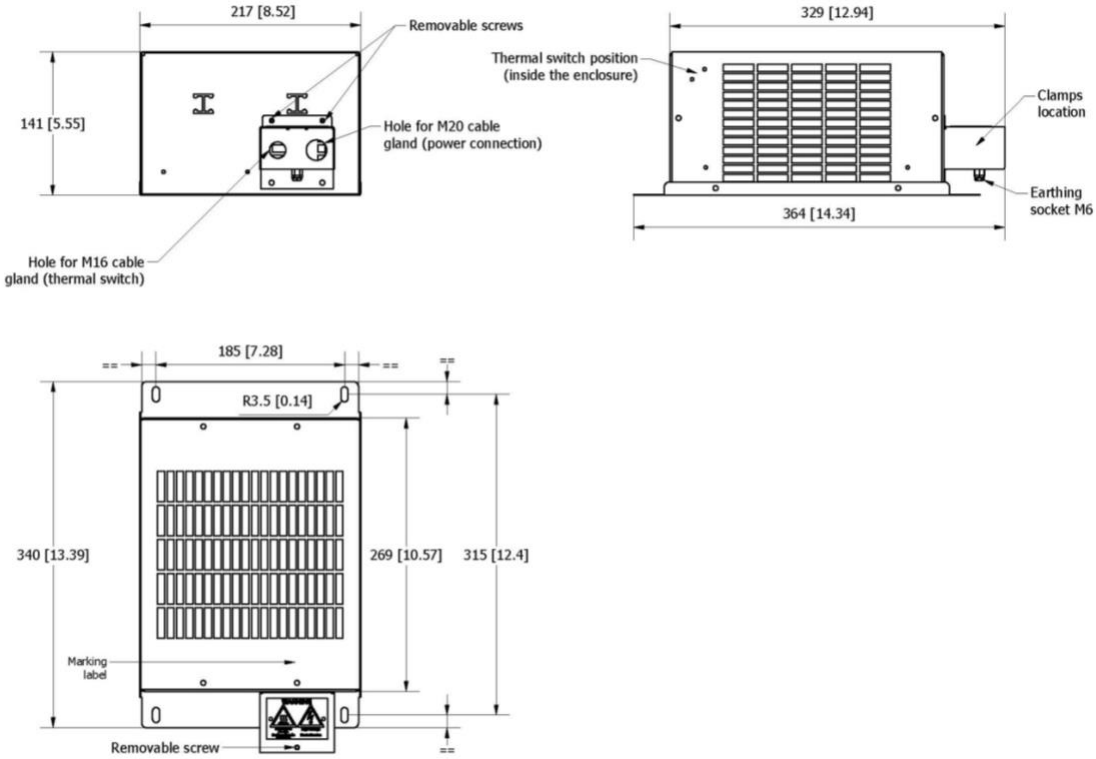

10 – RME 01L

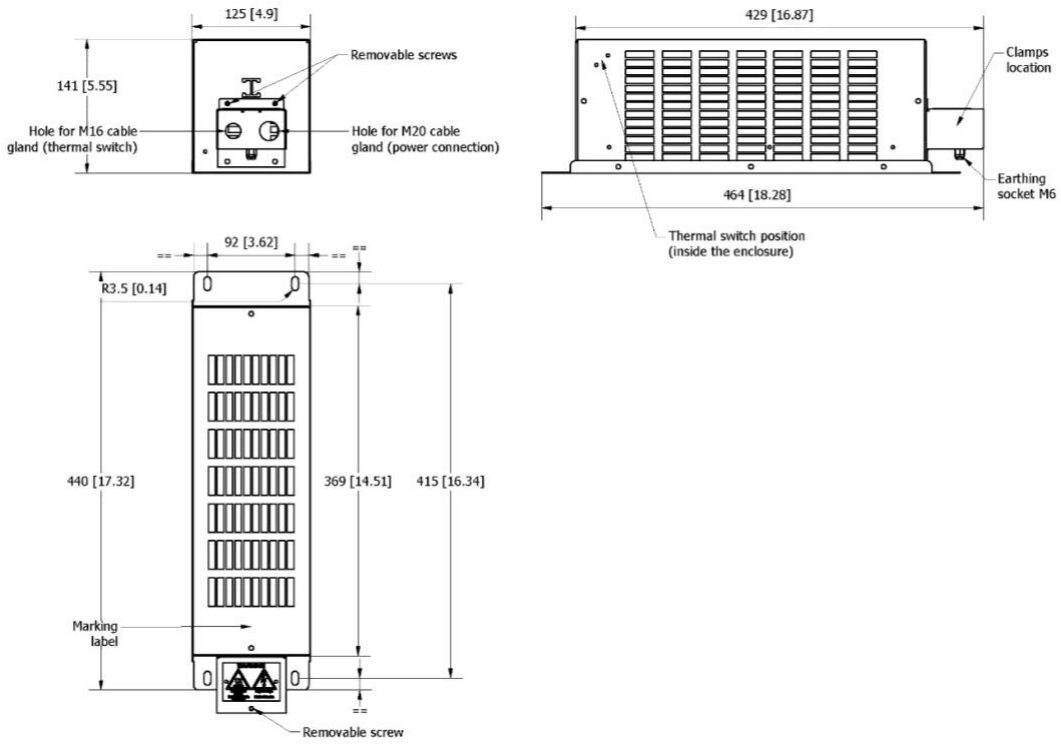

11 – RME 02L

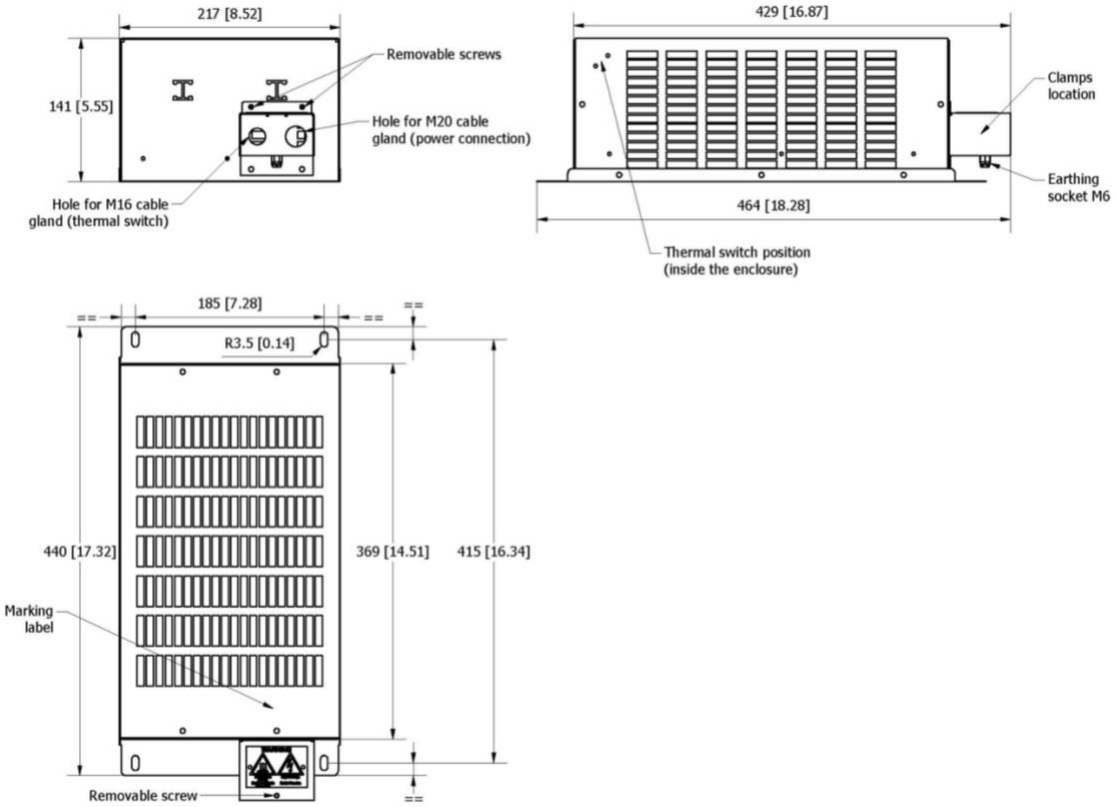

12 – RME 03L

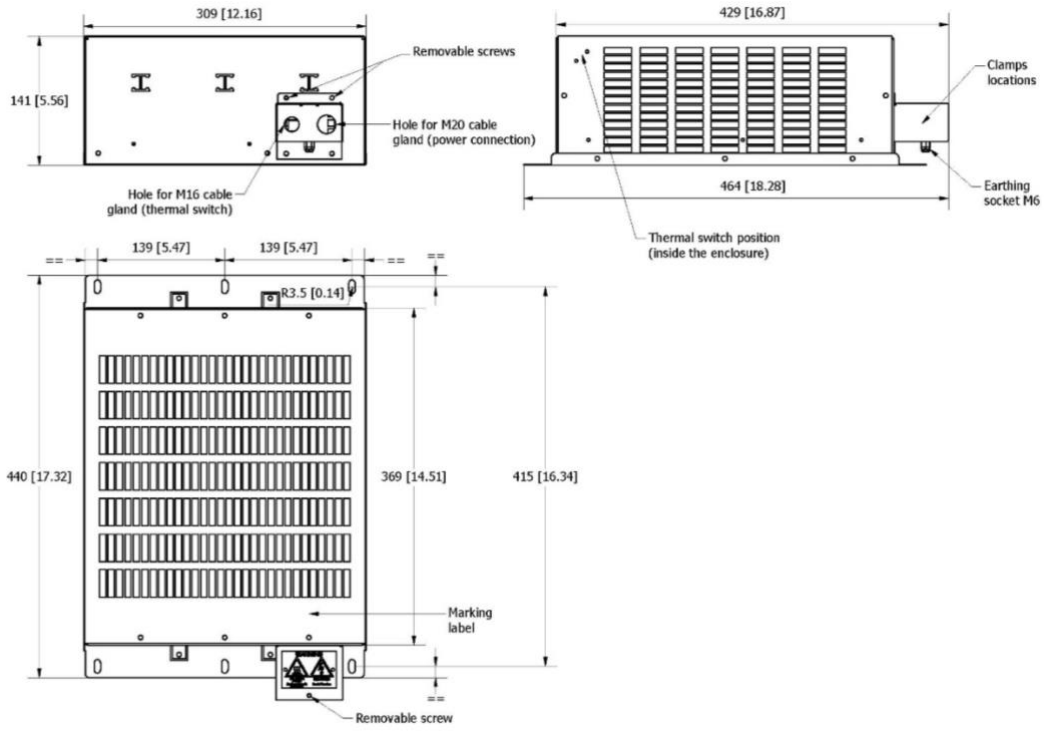

13 – RME 04L

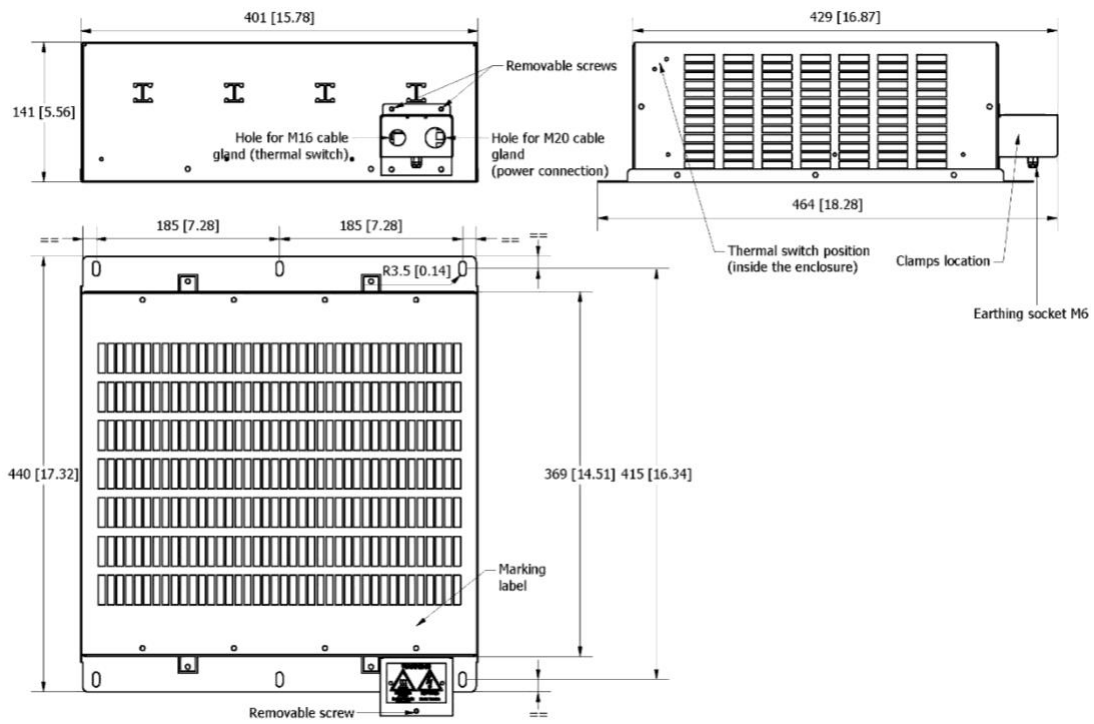

14 – RX 21S

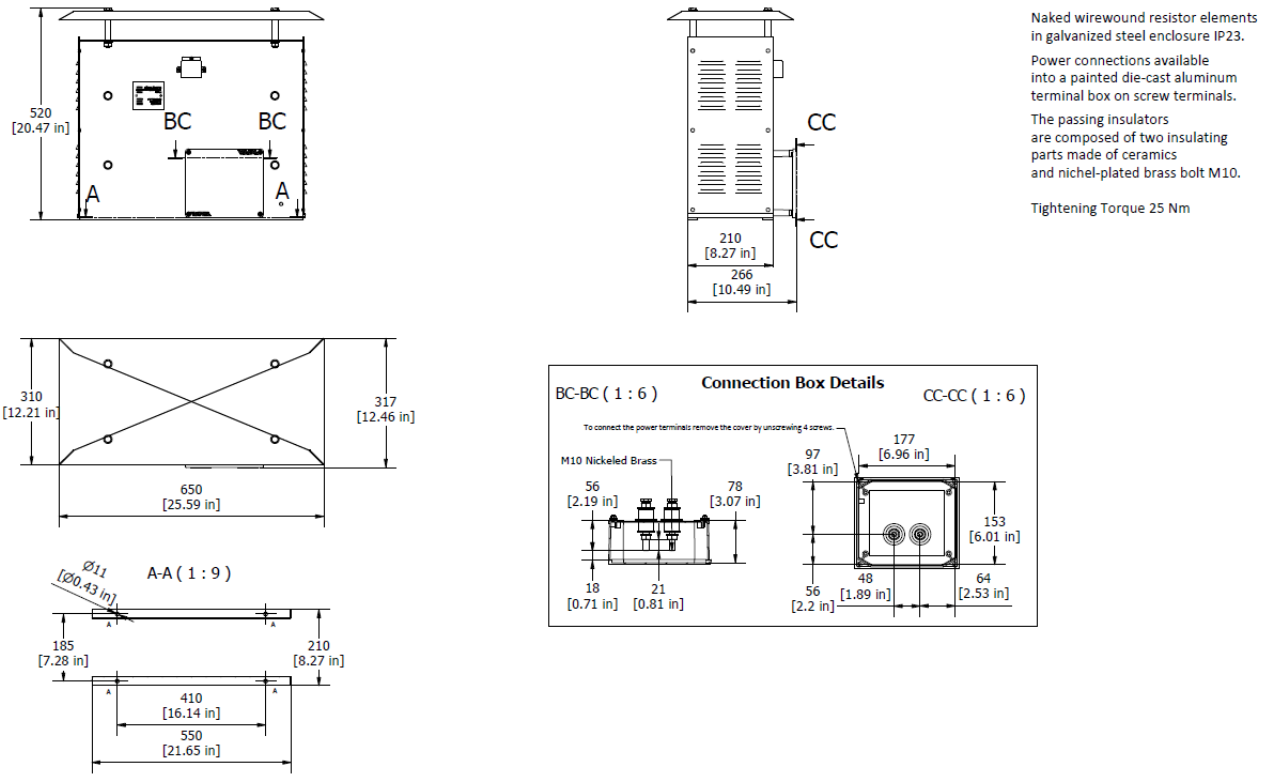

Naked wirewound resistor elements in galvanized steel enclosure IP23.

Power connections available into a painted die-cast aluminum terminal box on screw terminals.

The passing insulators are composed of two insulating parts made of ceramics and nichel-plated brass bolt M10.

Tightening Torque 25 Nm

15 – RX 35S

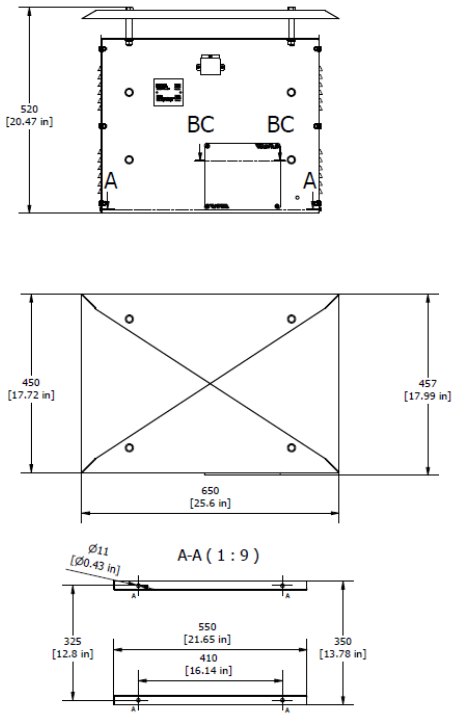

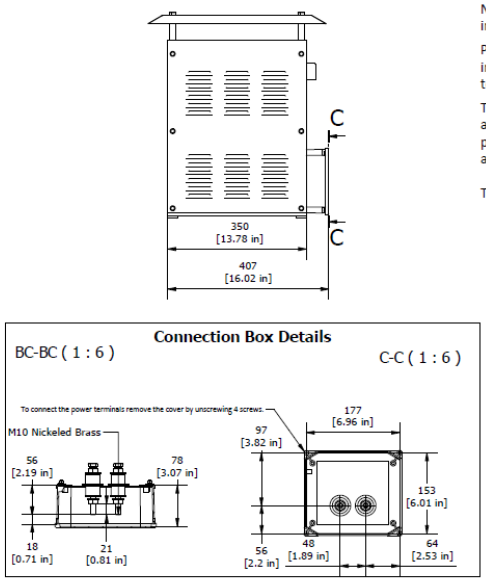

Naked wirewound resistor elements in galvanized steel enclosure IP23.

Power connections available into a painted die-cast aluminum terminal box on screw terminals.

The passing insulators are composed of two insulating parts made of ceramics and nichel-plated brass bolt M10.

Tightening Torque 25 Nm

16 – RX 50S

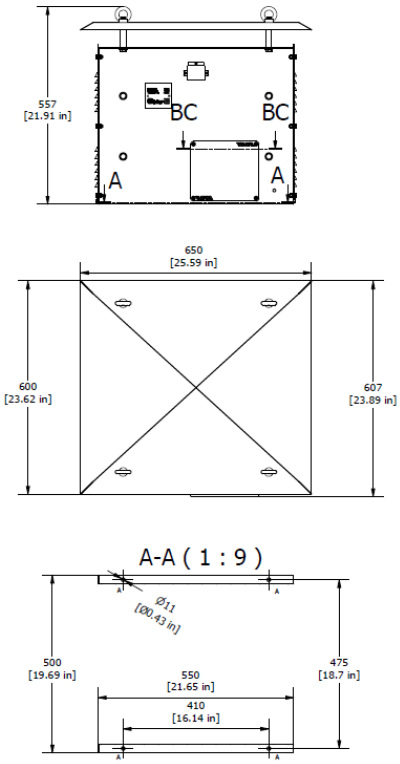

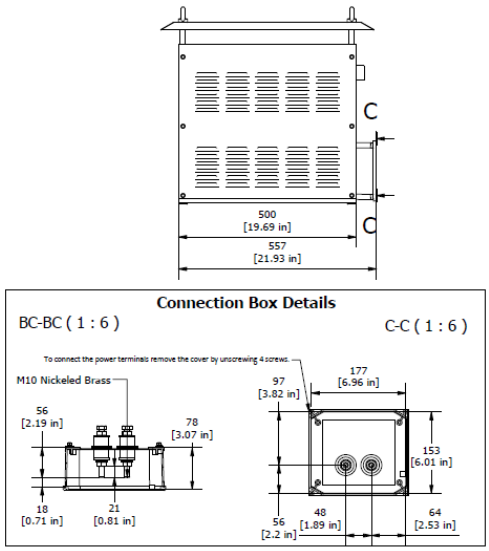

Naked wirewound resistor elements in galvanized steel enclosure IP23.

Power connections available into a painted die-cast aluminum terminal box on screw terminals.

The passing insulators are composed of two insulating parts made of ceramics and nichel-plated brass bolt M10.

Tightening Torque 25 Nm

17 – RX 65S

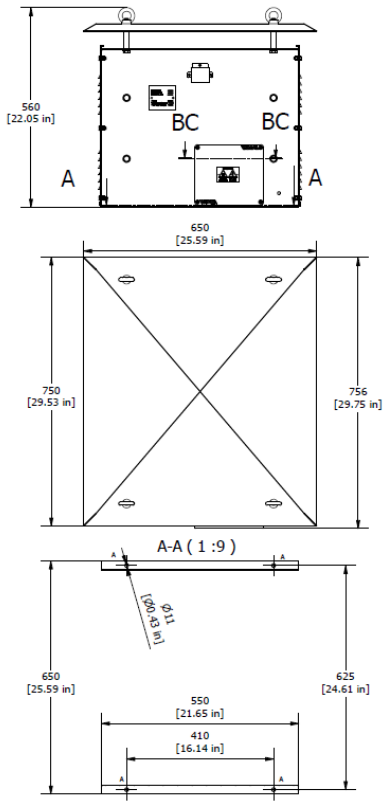

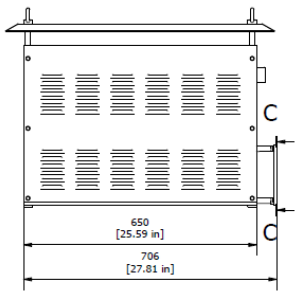

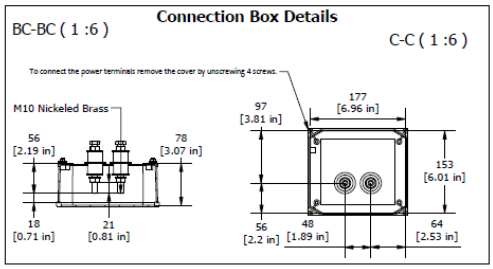

Naked wirewound resistor elements in galvanized steel enclosure IP23.

Power connections available into a painted die-cast aluminum terminal box on screw terminals.

The passing insulators are composed of two insulating parts made of ceramics and nichel-plated brass bolt M10.

Tightening Torque 25 Nm

18 – RNP

ID	L mm [in]	I mm [in]	Weight kg [lb]
RNP 800	371 [14,6]	338 [13,3]	1,35 [2,9]
RNP 1000	443 [17,44]	410 [16,14]	1,6 [3,5]
RNP 1200	522 [20,55]	489 [19,25]	1,9 [4,2]

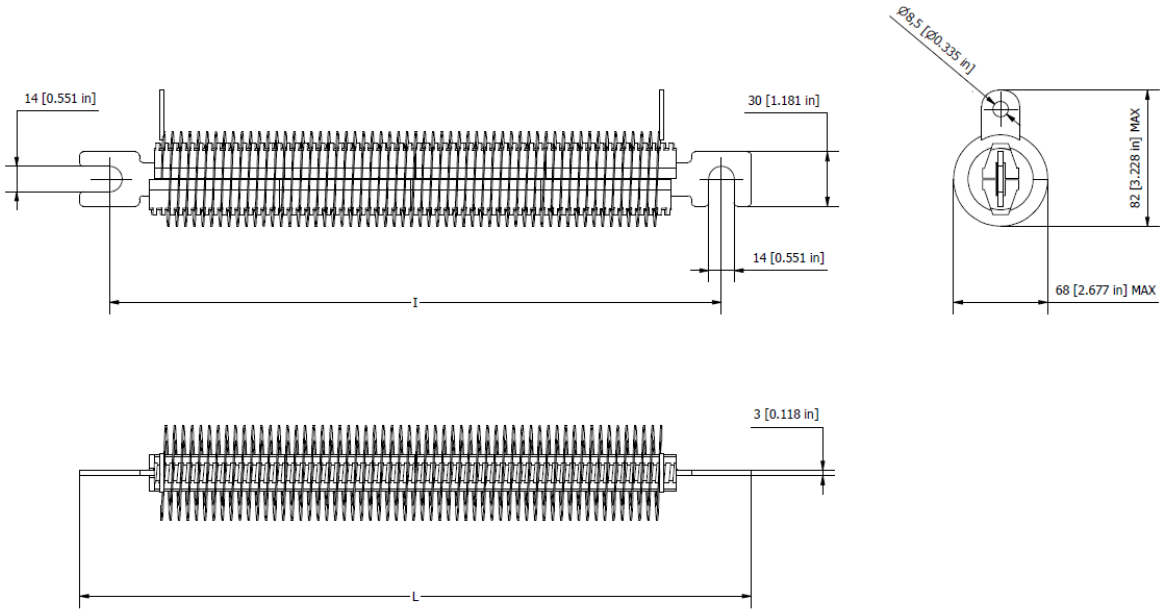

MECHANICAL DATA		
ID	L mm (in)	I mm (in)
RNP 800	371 (14.60)	338 (13.30)
RNP 1000	443 (17.44)	410 (16.14)
RNP 1200	522 (20.55)	489 (19.25)

19 – RNT

ID	L mm [in]	Weight kg [lb]
RNT 2	248 [9,76]	0,89 [1,9]
RNT 3	326 [12,83]	1,1 [2,4]
RNT 4	404 [15,9]	1,2 [2,6]
RNT 5	482 [19,97]	1,25 [2,7]
RNT 6	560 [22,04]	1,3 [2,8]

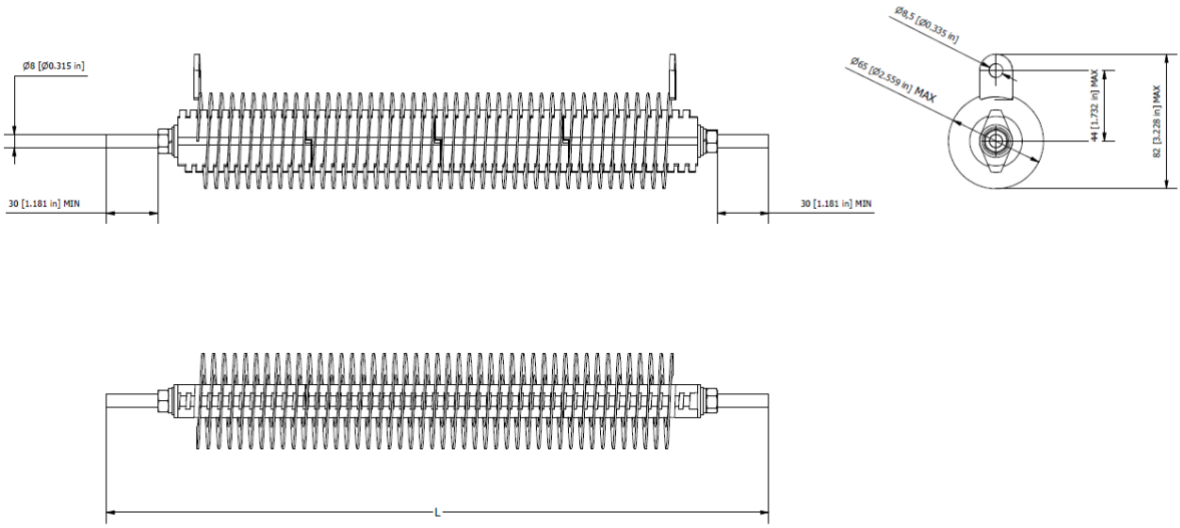

MECHANICAL DATA	
ID	L mm (in)
RNT 2	248 (9.76)
RNT 3	326 (12.83)
RNT 4	404 (15.90)
RNT 5	482 (19.97)
RNT 6	560 (22.04)

20 - RNT 700

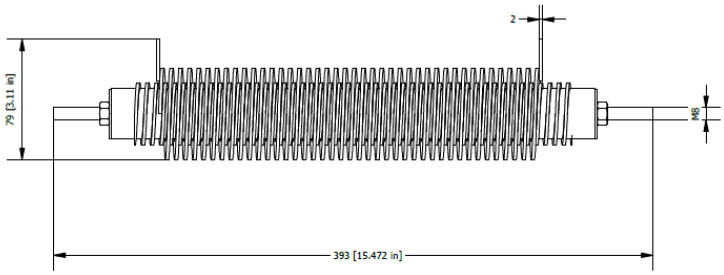

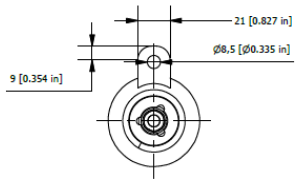

21 - RNT 900

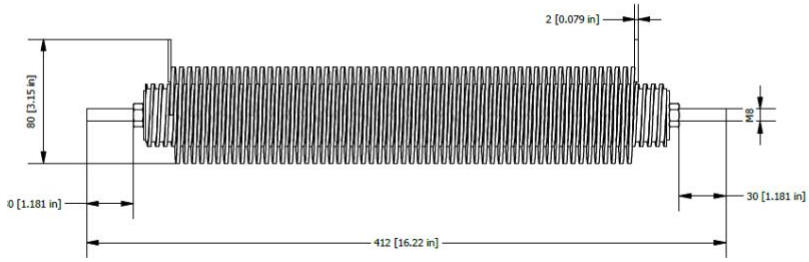

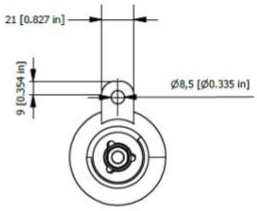

22 - RNT 1000

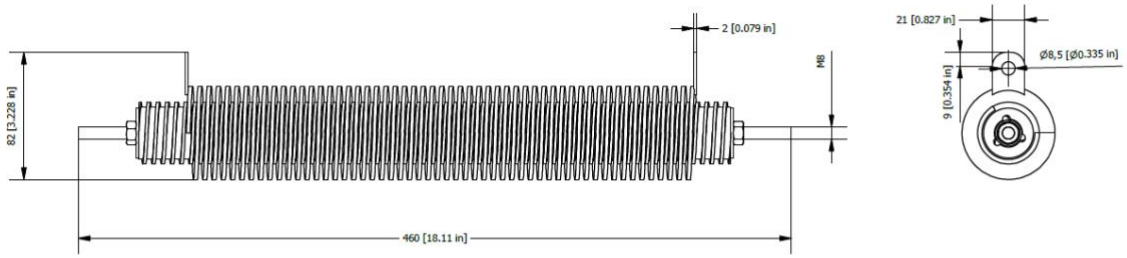
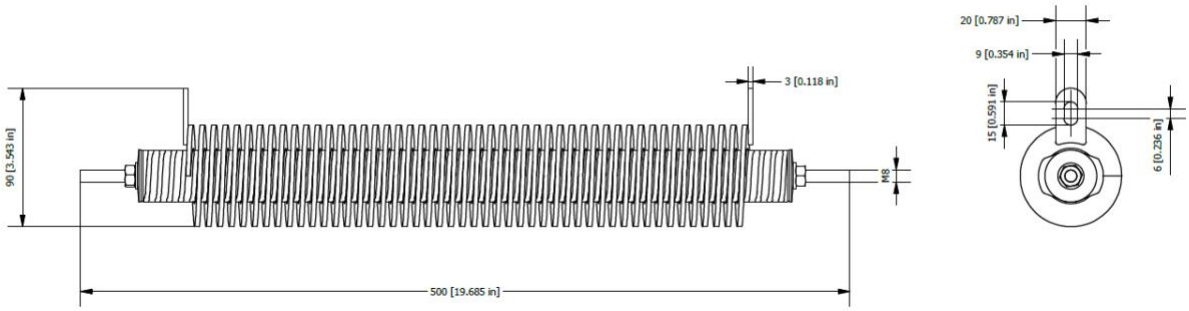
23 - RNT 1100